Loadlink plus

Known worldwide as the original electronic force measurement device to feature an integral display, the Loadlink plus has been in production since 1979. Over the years, the line has been expanded and it is now used on a daily basis for load monitoring and heavy lifts. These can range in capacity from 1t to 300t, and are used by a variety of industrial and commercial industries including manufacturing, transportation, agriculture, oil and gas, utilities, aerospace and clean energy.

This latest version of the well-known product has advanced features and benefits, providing solutions for today's complicated load test and force monitoring needs. The Loadlink plus features full function push button controls for tare, choice of units (lbs, kg, kN and tonnes), peak hold, preset tare, audible set-point alarm and an overload counter.

The advanced microprocessor-based electronics provide the Loadlink plus with high speed read rates, extreme resistance to industrial level noise and unprecedented stability. This high stability gives the Loadlink plus over 5,000 divisions and the highest standard resolution of any digital dynamometer on the market today. Constructed of high-grade aircraft quality aluminium, Straightpoint's advanced internal design structure allows the product to once again top the charts with an unmatched weight to strength ratio. Straightpoint's link style dynamometers are on average 30% lighter than their closest competitor with the same safety rating.

Optional Connection
to SP's Handheld plus
SP Crosby
Part Nos.
HHP
2789030

Features and benefits:

- Large 25mm or 1" LCD display
- High accuracy
- Selectable units te, lbs, kN & kg
- High resolution
- 100Hz Peak hold
- Push button tare
- Light weight
- Preset tare
- Overload counter
- 90db Audible set point alarm
- RS-485 serial output
- Design validated by F.E.A.
- 2-year warranty
- DNV-GL Type Approval
- Complies with ASME B30.26

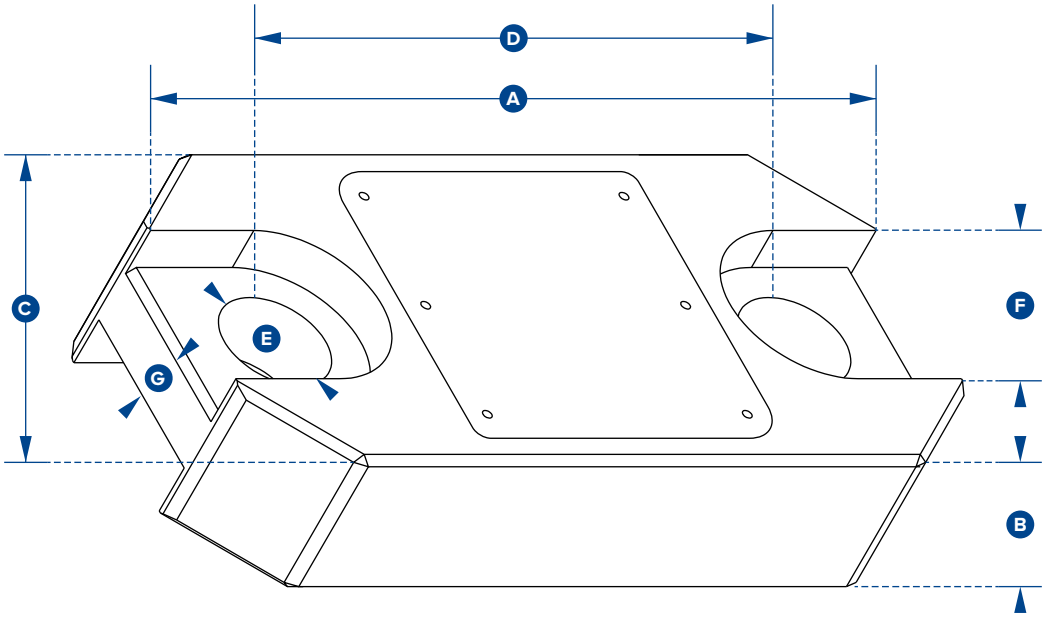

Part Numbers SP	LLP1T	LLP2T5	LLP6T5	LLP12T	LLP25T	LLP35T	LLP55T	LLP75T	LLP100T	LLP150T	LLP200T	LLP250T	LLP300T
Crosby	2789042	2789046	2789050	2789040	2789045	2789048	2789049	2789051	2789039	2789041	2789043	2789044	2789047
Capacity	1,000kg	2.5te	6.5te	12te	25te	35te	55te	75te	100te	150te	200te	250te	300te
	2200lb	5500lb	14300lb	26000lb	55000lb	77000lb	120000lb	165000lb	220000lb	330000lb	440000lb	550000lb	660000lb
Resolution	0.5kg	0.001te	0.001te	0.002te	0.005te	0.005te	0.01te	0.01te	0.05te	0.05te	0.1te	0.1te	0.1te
	1lb	2lb	2lb	5lb	10lb	10lb	20lb	20lb	100lb	100lb	200lb	200lb	200lb
Units	kg	te	te	te	te	te	te	te	te	te	te	te	te
	lb	lb	lb	lb	lb	lb	lb	lb	lb	lb	lb	lb	lb
Weight	1.5kg	1.5kg	2.4kg	3.7kg	5kg	8.6kg	13kg	16kg	34kg	46kg	82kg	82kg	118kg
	3.3lb	3.3lb	5.3lb	8.2lb	11lb	19lb	28.7lb	35.3lb	75lb	101.4lb	180.8lb	180.8lb	260lb
Safety Factor	12:1	7:1	7:1	7:1	5:1	5:1	5:1	5:1	5:1	4:1	5:1	4:1	5:1
Battery Type	9v PP3												
Battery Life	80 hours continuous												
Display Type	6 digit 25mm or 1" LCD												
Operating Temp	-10°C to +50°C or 14°F to 122°F												
Accuracy	±0.1% of full scale												
Protection	IP65 or NEMA4X												
Dimension A	204	204	249	305	340	393	424	470	608	670	700	700	806
	8.03"	8.03"	9.80"	12.01"	13.39"	15.47"	16.69"	18.50"	23.94"	26.38"	27.56"	27.56"	31.73"
Dimension B	43	43	43	47	60	75	75	75	99	99	144	144	150
	1.69"	1.69"	1.69"	1.85"	2.36"	2.95"	2.95"	2.95"	3.90"	3.90"	5.67"	5.67"	5.91"
Dimension C	104	104	113	113	115	126	180	202	255	303	350	350	426
	4.09"	4.09"	4.45"	4.45"	4.53"	4.96"	7.09"	7.95"	10.04"	11.93"	13.78"	13.78"	16.77"
Dimension D	146	146	165	193	215	225	230	260	320	360	350	350	350
	5.75"	5.75"	6.50"	7.60"	8.46"	8.86"	9.06"	10.24"	12.60"	14.17"	13.78"	13.78"	13.78"
Dimension ØE	24.5	24.5	38	47.5	55	60	76	76	109	109	145	145	160
	0.96"	0.96"	1.50"	1.87"	2.17"	2.36"	2.99"	2.99"	4.29"	4.29"	5.71"	5.71"	6.30"
Dimension F	48	48	65	Not relevant in this capacity									
	1.89"	1.89"	2.60"										
Dimension G	19	19	32										
	0.75"	0.75"	1.26"										
Crosby Shackle	G2130						G2140						
Loading Pin Ø	19	19	25	35	51	57	57	70	83	95	121	127	152
	3/4"	3/4"	1"	1 3/8"	2"	2 1/4"	2 1/4"	2 3/4"	3 1/4"	3 3/4"	4 3/4"	5"	6"

35 ANIVERSARIO
CIENTEC
Acatempan No. 2112,
Chapultepec Country 44620
Guadalajara, Jalisco, México.
Tel. (33)38170140
ventas@cientec.com.mx www.cientec.com.mx